535/4
PHYSICS
Paper 4
July / Aug. 2022
2¼ hours

UGANDA TEACHERS' EDUCATION CONSULT (UTEC)

Uganda Certificate of Education

PHYSICS

(PRACTICAL)

Paper 4

2 hours 15 minutes

Instructions to candidates

*Answer **Question 1** and one other question. You will not be allowed to start working with the apparatus for the first quarter of an hour*

Marks are given mainly for a clear record of the observations actually made, for their suitability and accuracy, and for the use made of them

Candidates are reminded to record their observations as soon as they are made. Whenever possible candidates should put their observations and calculations in a suitable table drown in advance

An account of the method of carrying out the experiment is not required

Squared papers are provided

Mathematical tables, slide rules and silent non- programmable calculators may be used.

© 2022 UTEC Mock Examinations

1. **In this experiment, you will determine the constant μ of the metre rule provided.**

(a) Suspend the metre rule on the retort stand using a loop from the longer piece of thread.

(b) Adjust the position of the loop of thread until the metre rule balances horizontally as shown in **fig. 1.**

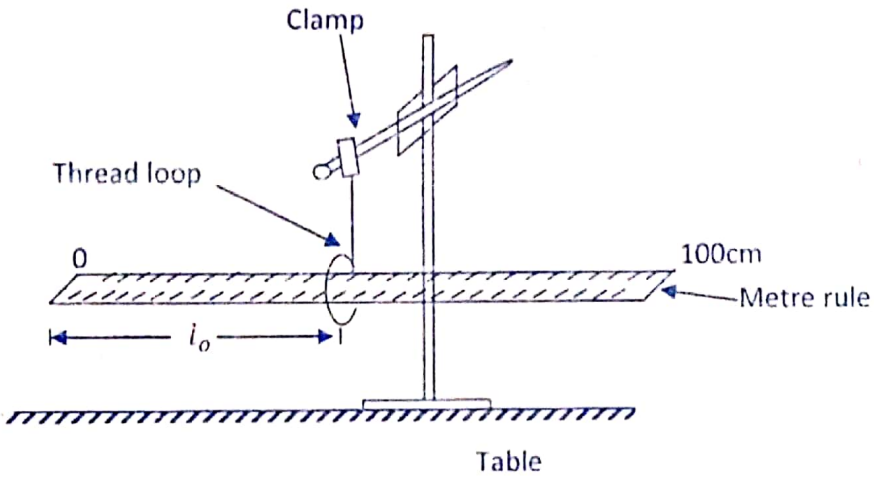

(c) Read and record the distance l_o, from the 0 cm mark.

(d) Suspend a mass $M = 0.050kg$, using a shorter piece of thread at a distance $l_1 = 80.0cm$ from the 0 cm mark.

(e) Balance the metre rule by adjusting the position of the loop of thread.

(f) Read and record the distance l_2, of the balance position of the loop from the 0 cm mark.

(g) Find the values of;

$y = (l_2 - l_o)$ *and* $x = (l_1 - l_2)$

(h) Repeat procedures (d) to (g) for values of;

$$m = 0.100, 0.150, 0.200, 0.250 \text{ and } 0.300kg.$$

(i) Record your results in a suitable table including values of $\frac{y}{x}$.

(j) Plot a graph of y/x along the vertical axis against **m** (along the horizontal axis).

(k) Find the slope s of the graph.

(l) Calculate μ from $s = \frac{1}{\mu}$

2. In this experiment, you will determine the focal length of the converging lens provided.

(a) Mount the lens in a holder and place it facing a window.

(b) Place the screen behind the lens and adjust the position of the screen until a clear image of the distance object is formed on the screen.

(c) Measure and record the distance ,k, between the lens and the screen.

(d) Marks a reference point $\boldsymbol{P}$ on the table and arrange the apparatus as shown in **fig.2** such that $y = 9.0cm$ *and* $l_1 = 30.0cm$.

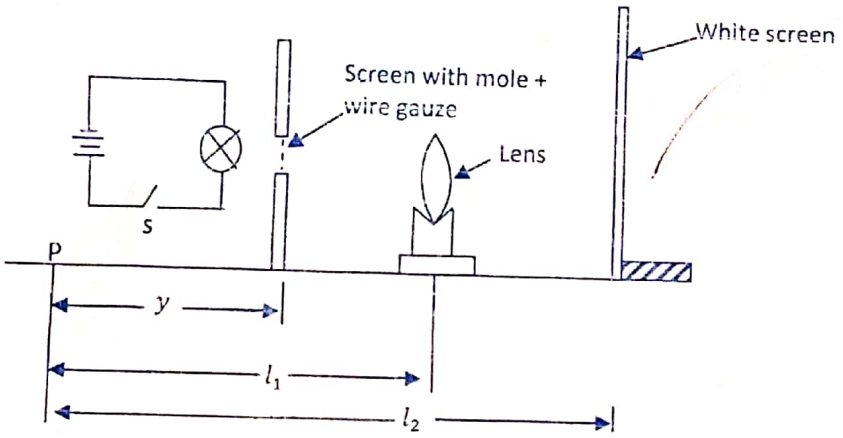

(e) Adjust the position of the screen until a clearly focused image is observed on the screen.

(f) Measure and record the distance l_2 from P to the screen.

(g) Repeat procedures (d) to (f) for values of l_1 = 35.0, 40.0, 45.0, 50.0 *and* 60.0cm

(h) Tabulate your results.

(i) Plot a graph of l_2 against l_1

(j) Find the minimum value of l_2 and the corresponding value, θ of l_1.

(k) Calculate the value of $K_1 = l_2(\theta - y)$

(l) For l_1 = 40.0cm, record the corresponding value of l_2 and calculate the value of k_2 from, $K = \frac{(l_1 - y)(l_2 - l_1)}{(l_2 - y)}$

Find the value $K_2 = \left(\frac{K_1 + K_2}{2}\right)$

3. In this experiment, you will investigate the relationship, **R**, between power and voltage for the torch bulb.

(a) Connect the dry circuit as shown in **fig. 3**

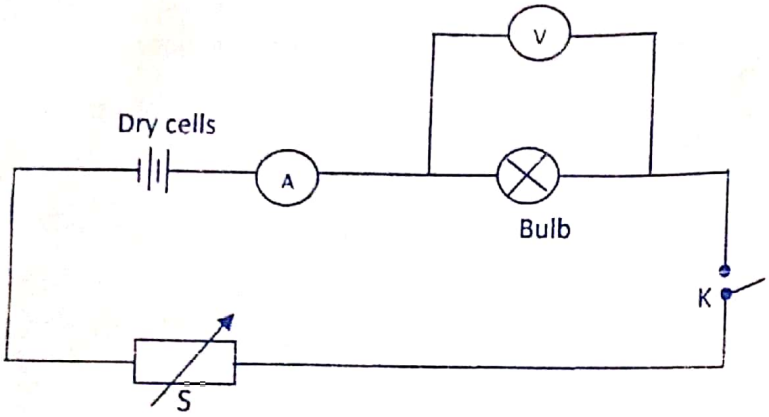

(b) Set the rheostat, s, to its maximum value and close switch k.

(c) Adjust the rheostat until the ammeter reads 0.14A.

(d) Read and record the ammeter and voltmeter reading I and V respectively.

(e) Repeat procedures (c) and (d) for values of

$I = 0.16,\ 0.18, 0.20, 0.22\ and\ 0.24A.$

(f) Record your results in a suitable table including values of $IV\ and\ V^2$.

(g) Plot a graph of IV (along the vertical axis) against V^2 (along the horizontal axis)

(h) Determine the slope, S of the graph.

(i) Calculate R, from the expression, $S = \frac{1}{R}$.

END

SIMON 0758401505

P1

UTEC - GUIDES 2022
UCE PHYSICS PRAC 535/4

Qn.1

R1 - Rec. value $l_0 = (48.5 - 51.5)$ cm or m. 1½

$l_1 = 80.0$ cm.

T1 - Design of 5-Columnar enclosed table ½ 1

- M-values entered with Unit in stated order. ½ accept M or m for Mass.

T2 - Label of Rest of Columns. l_2, y, x, $\frac{y}{x}$ @½ 2

- Indication of Units, cm, cm, cm, - @½ 2

$l_2 = 80 - x$
$l_0 = (48.5 - 51.5)$
$M_2 = (70g - 140g)$
$x = 28.5$
$\left(\frac{M_0}{M_2}\right)$

T3 - Rec. 6-values of l_2 using tw 1dp. @½ 3

- Rec. 6-values of y, Corr. calc. $(l_2 - l_0)$ to 1dp @½ 3

- Rec. 6-values of x, Corr. calc. $(l_1 - l_2)$ to 1dp @½ 3

- Rec 6-values of $\frac{y}{x}$, Corr. calc. @½ 1½

17

M(kg)	l_2(cm)	y (cm) $(l_2 - l_0)$	x (cm) $(l_1 - l_2)$	$\frac{y}{x}$
0.050	56.0 — 64.0			
0.100	61.0 — 69.0			
0.150	64.0 — 71.0			
0.200	67.0 — 73.0			
0.250	68.0 — 74.0			
0.300	69.0 — 76.0			

$\frac{y}{x}$ - Check Quotient Rule.

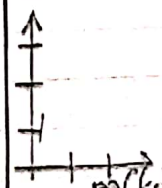

G1 - Title, A graph of $\frac{y}{x}$ against m 1

G2 - Drawing of axes. 1

G2 - Labelling of axes with Unit @½ 2

G3 - Uniform Scales & Corr. Usage. @½ 2

G4 - Corr. plotting within ½ small sq radius. 3

G5 - Best line of fit. 1

G6 - Indication of R.A.T. for Slope. 1

10

Consider G1 - G5 as per Q on distinct of in P3.

C1 - Calc. of Slope, S, ✓ Corr. Subtn ✗ ½

~~✓ Corr. Subtn Arithm.~~

✓ Corr. Arithm. ✗ ½ 1½

✓ Unit kg^{-1} ✗ ½

C2 - Calc. of μ, from $\mu = \frac{1}{S}$. ✓ Corr. Arithm. ✗ ½

✓ Accuracy (0.070 - 0.140) ✗ ½ 1½

✓ Unit kg. ✗ ½

03

Pg 2: Q2

R — Value, $k = (13.0 - 17.0)$, cm, $y = 8.0$ cm. — ½, ½

T_1 — Design of 2-Columnar enclosed table, ½ — 1
— l_1 - Values entered in stated order, ½

T_2 — Label of Columns, l_1, l_2 @½ — 2
— Indication of Units cm, cm @½

T_3 — Rec. 6-values of l_2 - Display a curve (1dp) @1½ — 9

14

l_1 (cm)	l_2 (cm)
30.0	64.0 — 120.0
35.0	61.0 — 84.0
40.0	62.0 — 78.0
45.0	65.0 — 77.0
50.0	69.0 — 79.0
60.0	77.0 — 86.0

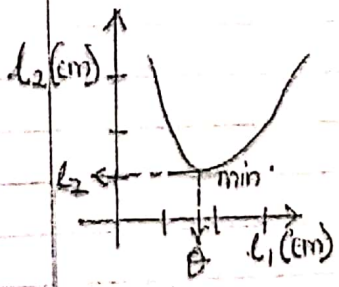

G_1 — Title, A graph of l_2 against l_1 — 1
G_2 - Drawing of axes with arrows 1
— Labelling of axes with Units @½ — 2
G_3 — Uniform Scales & Corr. Usage @1 — 2
G_4 - Corr. plotting within ½ small sq. — 3
G_5 — Smooth Curve drawn passing thru. Most of the plotted pts. — 1

09

C_1 — Value, $l_{2min} = 70.0 \pm 7$ with or without unit 1
, $\theta = 40.0 \pm 5$ 1 — 2

C_2 — Corr. Calc. K_1 = from $K_1 = (\theta - y)$.
✓ Corr. Arithmetic 1 — 1

*½ (θ-y).

C_3 — Value $l_2 = (62.0 - 78.0)$ cm; for $l_1 = 40.0$ cm. 1

C_4 - Corr. Calc., $K_2 = \dfrac{(40-9)(l_2 - 40)}{l_2 - 9}$
✓ Corr. Subst.
✓ Corr. Arithm. — 2

C_5 - Corr. Calc., $K_1 = \dfrac{K_1 + K_2}{2}$ ✓ Corr. Arithm.
✓ Accuracy. $(13.0 - 17.0)$ — 1

=07

UTEC GUIDES 2022
UCE, PHYSICS PRACTICAL 535/4

Pg2.

Q2 T_1 - Design of atleast 4-column table fully enclosed — 1
- I, values entered in stated order. — 2

T_2 - Label of Columns I, V, IV, V^2 @½ — 2
Indication of Units A, V, AV, V^2 @½ — 6

T_3 - Rec. 6-Values of V using 2d (2dp) (accept 1dp) @1 — 3
Rec. 6-Values of IV, Corr. Calc. to (2dp) @½ — 3
- Rec. 6-Values of V^2. Corr Calc. to (2dp) @½ — 17

I(A)	V(V)	IV (AV)	$V^2(V^2)$
0.14	0.30		
0.16	↑sing		
0.18			
0.20	Range		
0.22			
0.24	3.60		

Treatment:
IV - Check pdt Rule
V^2 - largest determines (square)

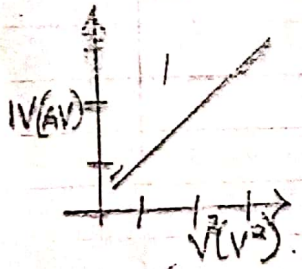

Lettered Conclusions as in Pg3.

G_1 - Title, A graph of IV against V^2 — 1
G_2 - Drawing of axes with arrows } 1
- Labelling of axes with Unit } @½ — 2
G_3 - Uniform Scales & Correct Usage @1 — 2
G_4 - Corr. plotting to ½ small sq. radius. @½ — 3
G_5 - Best line of fit — 1
G_6 - Indications of Triangle (RAT) — 1
— 10

C_1 - Calc. of slope, S. > Corr. Substn ✓
> Corr. Arithm. ✓✓
> Unit AV^{-1} or Ω^{-1} ✓ — $1\frac{1}{2}+\frac{1}{2}$

C_2 - Calc. of R.
SR = 1. > Corr. Arithm. ✓
> Corr. Unit, VA^{-1} or Ω ✓ — 1
— 03